User's Manual

Advanced MPPT Solar Charge Controller

CC-MPPT-Gen6

with Wi-Fi& Bluetooth (BLE) Connectivity

Systellar Innovations
Shankar Chowk, Delhi Road, Meerut – 250002
Ph: +91 121 434 2043 | Email: info@systellar.in
Website: www.systellar.in
Web app: https://systellar-cc-mppt.web.app

Introduction

Congratulations! You are the proud owner of one of the best MPPT charge controllers available in India. CC-MPPT-Gen6 has been introduced by Systellar Innovations in the market after the spectacular success of other Systellar PWM and MPPT Solar Charge Controllers.

CC-MPPT-Gen6 is an advanced Solar Charge Controller for charging 12V / 24V / 36V / 48V / any custom nominal voltage batteries of the following chemistries:

- Lead-Acid (SMF / FLA / Tubular / Gel)
- Li-ion
- LiFePO4
- Ni-Cd

The battery bank configuration and cell chemistry are selected at the time of installation, and cell settings such as 'end of charge voltage' and 'trickle charge voltage' can be changed as required.

Main Features:

1. Maximum charging current: 50A or 75A, depending on the model
2. Max PV input voltage: panel open circuit voltage (Voc) 175V maximum, on all battery banks (12V / 24V / 36V / 48V). 200V is the absolute limit of the power devices; a higher voltage may damage the controller
3. DC Load output: DC load voltage same as battery voltage. Maximum 40A DC load current allowed.
4. Power saver relay output (20A): To enable SMU (Solar Management Unit) feature to convert normal inverter into solar inverter.
5. WiFi / Bluetooth (BLE) connectivity through the plug-in Comm Stick: set up WiFi and view or change the settings from an Android phone over Bluetooth. Monitor the charge controller from anywhere on the Systellar web dashboard (https://systellar-cc-mppt.web.app).
6. Firmware updates over the internet: Systellar can update the firmware of the charge controller and of the Comm Stick over WiFi.

CC-MPPT-Gen6 tracks the maximum power point dynamically to extract the maximum possible power from the solar panels. A five-stage battery charging algorithm (Deep discharge, Bulk, Absorption, Trickle, and Equalization charge) is implemented which can charge the battery with precise current and voltage to achieve fast battery charging while ensuring long battery life.

Special charging mode for Li-ion batteries:

The deep discharge charging stage is only for Li-ion batteries (not for LiFePO4 batteries) to bring them out of the deep discharge state without damaging them. In this stage, the charging current is limited to 30% of the maximum current.

An equalizing charge for lead-acid batteries:

Lead-acid batteries may be put in an equalizing charging stage periodically (either automatically after a pre-programmed number of days or manually).

This User Manual describes the installation and operation of this Solar Charge Controller in detail. Please read this manual carefully before installing and operating the charge controller.

Front View

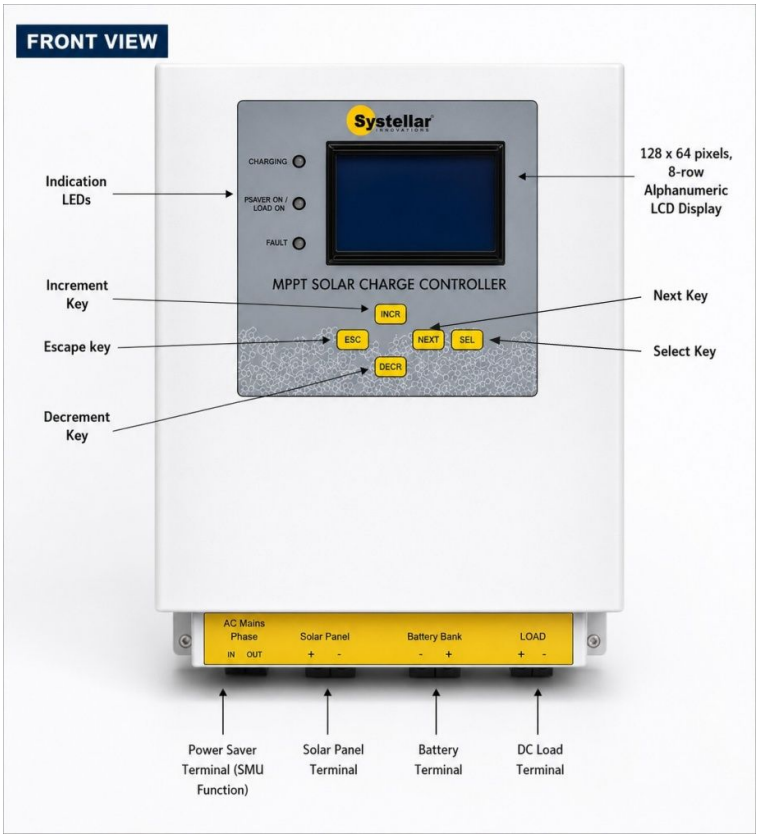

Side View



Front View with Comm Stick (WiFi / BLE model)



CC-MPPT-Gen6 with the Comm Stick fitted

Installing the Charge Controller

1. Install the charge controller indoors near the battery bank at eye level. This will make it easy to read the LCD and make any changes in the settings.
2. The minimum cable cross-section for different models should be as under: 50 A — 10 square mm; 75 A — 16 square mm.
3. Use a short, thick battery cable to reduce voltage drop and power loss. No compensation is made for the voltage drop in the battery cables; the voltages shown on the display are those at the charge controller connectors. Connect the battery cable to the charge controller first, observing the correct polarity. If the polarity is reversed, a red LED near the battery connections lights up and the display stays off; correct the polarity before proceeding. With the correct polarity, the LCD turns on.
4. When the battery is connected for the first time, the charge controller assumes the lead-acid (FLA) chemistry and estimates the nominal voltage from the battery terminal voltage. This is shown for confirmation: press SEL briefly to confirm, or press NEXT to set the battery chemistry and configuration (see 'Battery Bank Configuration Editing').
5. Check the open circuit voltage (Voc) of the solar panels. The maximum is 175V for all nominal battery banks (12V / 24V / 36V / 48V), including the rise in panel voltage on cold mornings.***Note:** A Voc above 200V may damage the charge controller. Connecting a solar panel voltage higher than the maximum of 175V will void the warranty. *

6. Connect the solar panel to the charge controller in the correct polarity. If solar panel wires are connected in reverse polarity, the display will keep showing 'Night' and the charging will not take place. If the display shows 'Night' in daylight, check the solar panel polarity first. ***Note:** When the solar panel is connected in reverse, it is shorted through an internal protection diode and considerable heat may be generated in the charge controller. Do not let it remain connected in this condition for long.*
7. Once solar panel connections have been made in the correct polarity, if it is daytime, the display will show 'Dawn VF' for approx. 5 sec and will then start charging the battery. **CAUTION:** If the solar panel voltage is above 60 volts, take care not to touch the solar panel cable ends with a bare hand. It may give an electric shock.
8. Plug the Comm Stick firmly into the Comm Stick connector (GX16) of the charge controller. Once the controller is running, the WiFi and Bluetooth status icons appear at the right end of LCD row 1. Then set up WiFi from the Android app (see 'WiFi / Bluetooth (BLE) Connectivity'). **Note:** Connect or remove the Comm Stick only while the charge controller is powered off. If it is running, first disconnect the solar panel and then the battery, plug in (or remove) the Comm Stick, and reconnect the battery followed by the solar panel. On a new installation, plug in the Comm Stick before connecting the battery (step 3).

Power Saver

This feature is for converting a normal inverter into a solar inverter

In systems with an inverter, we do not want to use mains power for the AC load or for charging the batteries during the day when abundant sunlight is available. CC-MPPT-Gen6 has a built-in power saver relay which cuts the mains supply to the inverter during the day. The relay capacity is 250V AC, 20A, sufficient for a 4 kW load.

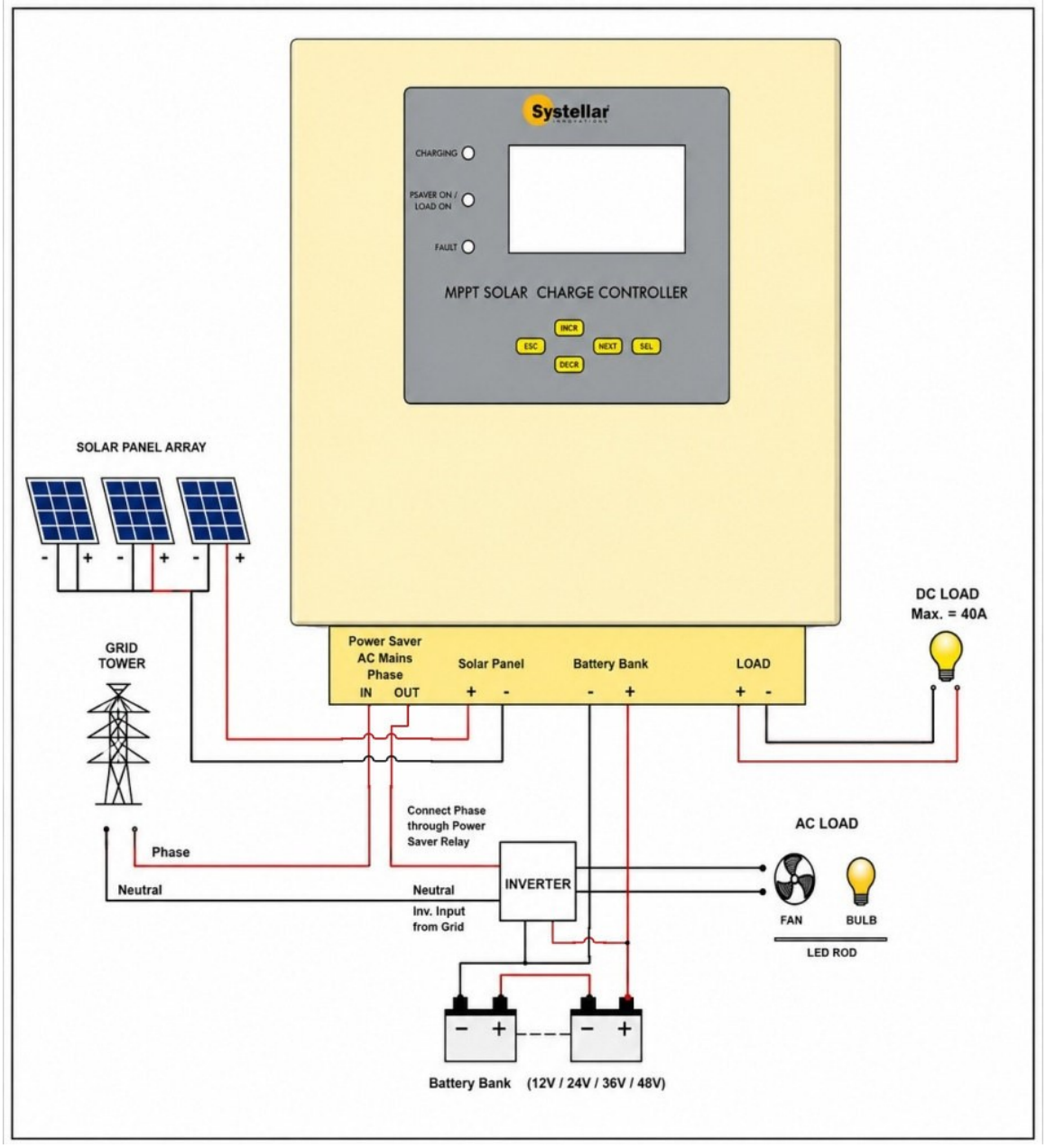

Power Saver Connection Diagram

The Common and N/C contacts of the relay are available on a terminal block. The mains N wire goes directly to the inverter and the phase goes through the relay contacts. When the battery voltage is above the '**Power saver turn-on threshold**', the relay cuts off the phase to the inverter, so only solar power runs the load and charges the battery. When the battery voltage falls below the '**Power saver turn-off threshold**', the relay reconnects the phase and the inverter also charges the battery from the mains.

For inverters that draw more than 20A current from the mains, the user should use an external power saver relay of the appropriate rating.

LED Indication

CC-MPPT-Gen6 has the following LED indicators:

S No	LED	Condition	Indication
1	Green	Night	Off
		Charging with current < 5A	One 100 msec blink at 2-second interval
		Charging current > 5A	Two 100 msec blinks at 2-second interval
		Fully charged battery	(When the battery has attained the end of charge voltage and has gone to the Absorption stage / Trickle stage) Solid on
2	Blue	Indication mode 0 (Led B indicator mode, see Programmable Parameters)	Displays status of Power Saver on/off
		Indication mode 1 (Led B indicator mode, see Programmable Parameters)	Displays status of DC load on/off
3	Red	Status OK	Off
		Battery discharged (DC load disconnected)	One 100 msec blink at 2-second interval
		Overload: DC load current exceeded 40A (DC load disconnected)	Two 100 msec blinks at a 2-second interval. (The system will try to turn on the load again after 1 minute)
		Battery voltage too high, e.g. an external charger is connected (charging stops and DC load disconnected)	Three 100 msec blinks at a 2-second interval
		PV voltage too high (charging stops)	Four 100 msec blinks at a 2-second interval

LCD Display Messages

CC-MPPT-Gen6 has a 128x64 pixel back-lit graphic LCD which shows 8 rows of about 22 characters each (the exact number depends on the width of the characters displayed). It displays the entire charging status without any interruption. The following information is displayed on the LCD:

Row	Display
1	Charging status, with the WiFi and Bluetooth status icons at the right end of the row
2	Charging stage
3	Battery bank voltage and charging current

4	Solar Panel voltage, Solar Panel current, and Solar Panel power
5	Energy harvested today and the total energy harvested till date
6	Battery and heat sink temperature
7	DC Load on/off status, Power Saver on/off status
8	Status messages

During power on, programming parameters, etc. appropriate messages are displayed to guide the user.

Messages related to the Comm Stick shown on row 8:

- **No BLE/WiFi module** – the Comm Stick is not plugged in or is not responding. Row 1 then shows the WiFi and Bluetooth icons, each followed by a small x.
- **Re-checking BLE/WiFi** – the charge controller is re-establishing contact with the Comm Stick.
- Updating Comm stick / Comm stick restarting – the Comm Stick is installing a firmware update (see 'Firmware updates over the internet').

Setting Programmable Parameters Using Keyboard Commands

It is possible to enter programmable parameters mode using the front panel keys and the LCD. To enter the menu, press the SELECT key on the front panel for more than 1 second.

Settings Menu

The following menu is displayed with one of the choices highlighted. Pressing **SEL** selects that choice. Pressing **NEXT** highlights the next choice. Press ESC to leave the menu; it also closes by itself if no key is pressed for 30 seconds.

S No	Menu choice	Action
1	Edit Programmable parms	Press SEL to enter the Programming mode (see 'Programming Mode'). Charging stops while parameters are being edited and restarts when you leave the Programming mode. Press NEXT to go to the next menu choice.
2	System Information	Press SEL to show the identity of the unit: Device Id, mother-board and control-card PCB versions, PV voltage class (V_oc), number of buck channels, whether the Power saver and DC output are fitted, firmware version and model. Keep this information handy when calling for service. Press ESC to return to the menu.
3	Restart System	Press SEL; the controller asks "Restart the system now?". Press SEL (Yes) to restart, or ESC (No) to return to the menu. Today's harvested energy is saved before the restart.
4*	Set Equalize Chg.? Reset Equalize Chg.?	Set Equalize Chg.? – if the battery should keep getting charged up to the 'Equalize charge voltage' after reaching the end of charge voltage, press SEL. The equalization stage is now set. Reset Equalize Chg.? – shown instead when the

		equalize charge is already set. Press SEL to reset the equalize charge stage. Press NEXT to go to the next menu choice.
5	Re-check BLE/WiFi	Press SEL to make the charge controller re-establish contact with the Comm Stick, for example if row 8 shows 'No BLE/WiFi module' or the WiFi and Bluetooth icons are each followed by a small x. Charging is not affected. Press NEXT to go to the first menu choice.

** Menu option 4 is displayed only if the battery is lead-acid type. For other battery types 'Re-check BLE/WiFi' becomes menu choice 4.*

Programming Mode

Pressing SEL when "Edit Programmable parms" is highlighted opens the Prog level menu:

Prog level menu

S No	Menu choice	Action
1	Edit Batt bank Config?	Press SEL to Edit battery bank parameters. Press NEXT to go to the next menu choice.
2	Edit Cell Settings?	Press SEL to Edit selected battery bank cell settings. Press NEXT to go to the next menu choice.
3	Edit Prog Parms?	Press SEL to Edit programmable parameters. Press NEXT to go to the next menu choice.
4	Restore Factory Setting?	Press SEL to reset edited programmable parameters (if any) and restart the system with the default factory settings. Press NEXT to go to the first menu choice.

Battery Bank Configuration Editing

Pressing **SEL** when the "Edit Batt bank Config?" message is being displayed will take you to the 'Battery bank configuration' menu:

1. Battery Chemistry: a. Lead-acid FLA • b. Lead-acid SMF • c. Lead-acid GEL • d. Lead-acid Tubular • e. Li-ion • f. LiFePO4 • g. NiCad

If the battery chemistry is lead acid, you can choose a nominal battery voltage from 12V / 24V / 36V / 48V. For other battery chemistries, you can specify the number of cells in the battery.

Cell Settings

Pressing **SEL** when the "Edit Cell Settings?" message is being displayed will take you to the 'Cell settings' menu:

1. Battery end of charge voltage (end of Bulk charge stage, start of absorption charge stage).
2. Battery absorption charge stage period.
3. Battery trickle charge voltage (The voltage at which the battery voltage should be maintained after the end of the absorption charge stage).

4. Battery re-bulk voltage (If the battery voltage goes below this voltage, the charge controller will again go to the Bulk charging stage).
5. Battery Low cut enter voltage (If the battery voltage goes below this voltage, the charge controller displays the battery discharged fault and disconnects the DC load. It cannot be set below 10.0V for any battery bank, because the charge controller needs at least 10V to operate. The Low cut exit voltage equals the nominal battery bank voltage).
6. Battery Equalize charge voltage (Only for lead-acid batteries; see 'Equalizing Charging').
7. Equalizing charge interval (Only for lead-acid batteries: 1 to 60 days, default 15; 0 = no automatic equalizing).
8. Temp Coefficient (Only for lead-acid batteries. Adjusts the end of charge, trickle and equalize charge voltages according to the battery temperature sensed by the optional sensor. For all other battery types it is 0, so no compensation is applied and the setting is not shown).
9. Equalizing charge time (Only for lead-acid batteries: 0 to 120 minutes in steps of 5 minutes; default 60 minutes).
10. Power saver turn-on threshold (Power saver will turn on if the battery voltage is above this value).
11. Power saver turn-off threshold (Power saver will turn off if the battery voltage falls below this value).

Programmable Parameters

Pressing **SEL** when the "Edit Prog Parms?" message is being displayed will take you to the 'Program Parameters' menu where the following programmable parameters can be set:

1. Maximum charging current: Can be reduced, mainly to protect small-capacity batteries: 5 to 50 A for the 50 A model, 5 to 75 A for the 75 A model.

2. DC Load Ctrl code (LCC): Users can also modify the DC Load on/off timings by setting the Load ctrl code from 0 to 14. If LCC is 0: The load will always be on. If LCC is 1: The load will turn on at Night and turn off during the day. If LCC is 2-14: Load will turn on at Night for 2-14 hrs. and turn off in the Day.

3. Led B indicator mode: Selects what the blue LED shows. 0 (default): the blue LED shows the Power saver on/off status. 1: the blue LED shows the DC load on/off status.

Notes (apply to all the programming menus):

1. Press SEL to choose an option and NEXT to go to the next option. Press INCR / DECR to increase / decrease the displayed value; holding the key changes the value continuously up to its limit. Press ESC to go back to the previous menu level; ESC at the top level leaves the menu.
2. All voltages concern the complete battery bank voltage.
3. The programmable parameters are stored in non-volatile memory inside the Charge controller. Even if the battery connections are removed, the values of programmed parameters are retained.
4. These settings can also be viewed and changed from the Settings tab of the Android app (see 'Dashboard and Settings in the app').

Equalizing Charging

It is useful to "overcharge" the Lead Acid battery bank for a limited period once every 15 days or a month or so. This is especially helpful when several batteries are connected in series (like 24V, 36V, and 48V battery bank). It helps in equalizing the charge in all the cells

of the battery bank by bringing them to full charge. The electrolyte in the batteries is also homogenized by agitation during gassing at the time of "overcharge".

To set an equalizing charge manually, select 'Set Equalize Chg.?' in the Settings Menu (select 'Reset Equalize Chg.?' to cancel it). To equalize automatically, set the Equalizing charge interval (Cell Settings) to 1–60 days; the default is 15, i.e., every 15th day. With the interval set to 0, equalizing is done only when set manually.

Setting the equalization stage does not start it immediately; it is the last leg of battery charging. Instead of stopping at the end of charge voltage, the battery is taken up to the Equalize charge voltage and held there for the Equalizing charge time (default 60 minutes). The battery then goes into the Trickle stage and the equalization stage is reset automatically. If the battery does not reach the Equalize voltage, the equalization stage carries over to the next day.

WiFi / Bluetooth (BLE) Connectivity

The CC-MPPT-Gen6 is supplied with a plug-in Comm Stick. The Comm Stick connects the charge controller to:

- **Your Android phone, over Bluetooth (BLE):** set up the WiFi connection, see the live readings and view or change the settings while standing near the charge controller. No internet connection is needed for this.
- **The Systellar cloud, over WiFi:** the readings of the charge controller are uploaded through your WiFi router, so that you, and anyone you authorize, can monitor it from anywhere on the Systellar web dashboard (https://systellar-cc-mppt.web.app).

The charge controller functions independently of the Comm Stick. If the Comm Stick is unplugged, or WiFi or the internet is not available, charging continues normally; only the app and the remote monitoring are affected.

The Comm Stick



Comm Stick CS32-01: Forget WiFi button and status LED (left), GX16 connector to the charge controller (right)

Requirements

- An Android phone (Android 7.0 or later) with Bluetooth, with the Systellar Solar app installed. User can download the Android app "in.systellar.cc.mon" from Google Play.
- A 2.4 GHz WiFi network with internet access at the installation site. 5 GHz-only WiFi networks are not supported.

- The name (SSID) and password of that WiFi network.

Comm Stick status LED and Forget WiFi button

The Comm Stick has a status LED that shows:

- **Red, slow blink:** the Comm Stick has just been powered on and is waiting for the charge controller to start it; Bluetooth and WiFi are still off. This normally lasts only a few seconds.
- **Blue, double blink** (two short flashes, then a pause): no WiFi network has been set up yet, or it has been erased with the Forget WiFi button. Bluetooth is on, so the app can connect and set up WiFi.
- **Blue, single blink:** a WiFi network has been set up and the Comm Stick is searching for, or connecting to, the router.
- **Green, brief flash:** data is being exchanged with the app or uploaded to the cloud.
- **Off:** idle – WiFi connected and no data moving at that moment.
- **Red, steady:** the Forget WiFi button has been held for 2 seconds and the stored WiFi network has been erased. The LED stays red until the button is released.

To erase the stored WiFi network and password (for example when the router or its password is changed), press and hold the Forget WiFi button on the Comm Stick for about 2 seconds, until the LED turns steady red, and then release it. A shorter press does nothing. The Comm Stick disconnects from WiFi and the LED changes to the blue double blink. The app PIN and the claiming of the device on the web app are not affected. Then set up WiFi again from the app.

WiFi and Bluetooth icons on the LCD

The right end of LCD row 1 shows the connection status:

- **Bluetooth icon:** the Bluetooth of the Comm Stick is on and the app can connect.
- **WiFi icon, blinking:** a WiFi network has been set up, but the Comm Stick is still connecting to the router.
- **WiFi icon, steady:** connected to the router and to the internet.
- **WiFi icon with a slash:** connected to the router, but the router has no internet connection.
- **No WiFi icon:**WiFi has not been set up yet.
- **WiFi and Bluetooth icons, each followed by a small x:** the Comm Stick is not plugged in or is not responding; row 8 shows 'No BLE/WiFi module'. See Troubleshooting.
- **Blinking down-arrow in place of the Bluetooth icon:** the Comm Stick is downloading a firmware update.

Setting up WiFi with the Android app

Stand near the charge controller and follow these steps:

1. Turn on Bluetooth on the phone and open the Systellar Solar app. Allow the Nearby devices (and, on older phones, Location) permission when asked; Android needs it to search for Bluetooth devices.
2. On the Home tab, tap **Start Scan**, then tap your Comm Stick in the scan results to connect. It is listed as CC-MPPT-6 followed by the Device ID of the charge controller, for example CC-MPPT-6-103.
3. If the phone shows a Bluetooth pairing request, accept it. Pairing is needed only the first time; it secures the link between the phone and the Comm Stick.
4. Under **1. Unlock**, enter the 4-digit PIN and tap **Unlock**. The factory-set PIN is **0000**.

5. Recommended: enter a new 4-digit PIN under **New PIN** and tap **Change PIN**, so that only people who know the PIN can change the settings or the WiFi network. Keep a note of the new PIN in a safe place. If you forget the PIN, contact Systellar service; it cannot be reset from the keyboard, and Restore Factory Setting does not change it.
6. Under **2. WiFi network status**, tap **Scan WiFi networks** and pick your network from the list (or type its name in the SSID box). Enter the WiFi password and tap **Save & Connect**.
7. Tap **Refresh** to check the connection. Once connected, the WiFi icon on the LCD becomes steady and the charge controller starts uploading its readings.

The WiFi network name and password are stored in the Comm Stick and are retained when the power is off. Repeat these steps to move the charge controller to another WiFi network.

Dashboard and Settings in the app

- **Dashboard tab:** the charging power on a live gauge, together with the detailed live readings of the charge controller.
- **Settings tab:** the battery bank configuration, cell settings and programmable parameters described earlier in this manual. Use the arrow buttons of a parameter to change its value (after unlocking with the PIN); the new value is stored in the charge controller straight away. Tap **Refresh** to read all the values again.

Values outside the allowed range are refused by the charge controller, just as on the keyboard. Some parameters depend on others – for example the equalize charge voltage can never be lower than the end of charge voltage – so changing one value may also change another.

Remote monitoring on the web dashboard

Once the WiFi icon on the LCD is steady, register (claim) the charge controller to your own account on the Systellar web dashboard:

1. Scan the QR code on the claim sticker on the Comm Stick, or open https://systellar-cc-mppt.web.app/claim. The sticker also carries the Device ID and the Passcode of the unit.
2. Check that the Product family (CC-MPPT-6), Device ID and Passcode are filled in (type them from the sticker if not), enter your email address and tap **Continue**.
3. Set a dashboard password (or enter your password if you already have an account) and tap **Claim Device**.
4. From now on, open https://systellar-cc-mppt.web.app, enter the email address you registered when claiming the device and your dashboard password, and click **Sign In** to monitor the charge controller from anywhere. If you forget the password, enter your email address and click **Forgot password?** on the same screen; a password-reset link is sent to that email address.

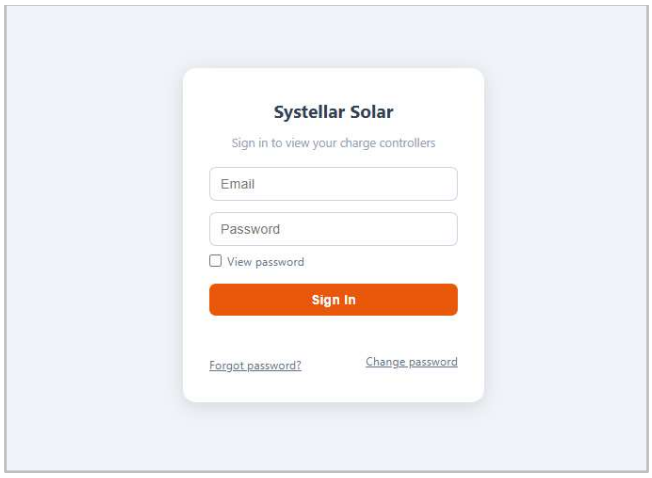

Web app sign-in screen

The dashboard shows the live readings, today's solar power curve, the day-by-day history of harvested energy and the settings of the charge controller (read-only). Readings are uploaded about every 30 seconds during the day and every 5 minutes at night.



Web app dashboard: live readings of the charge controller

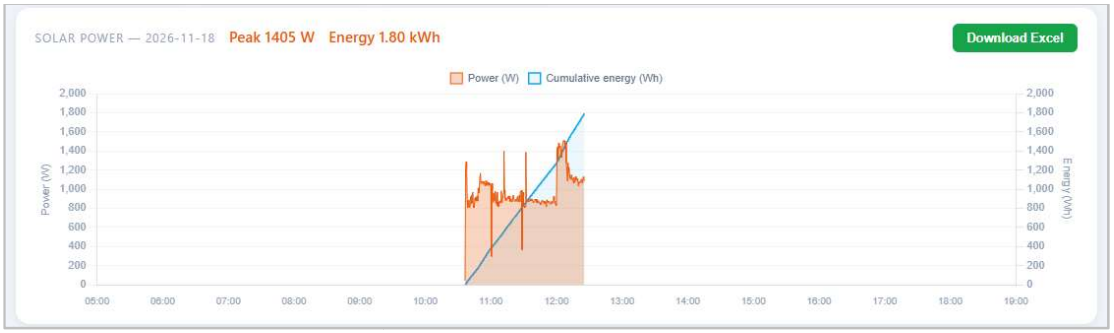

Web app: today's solar power curve (W) and cumulative energy (Wh)

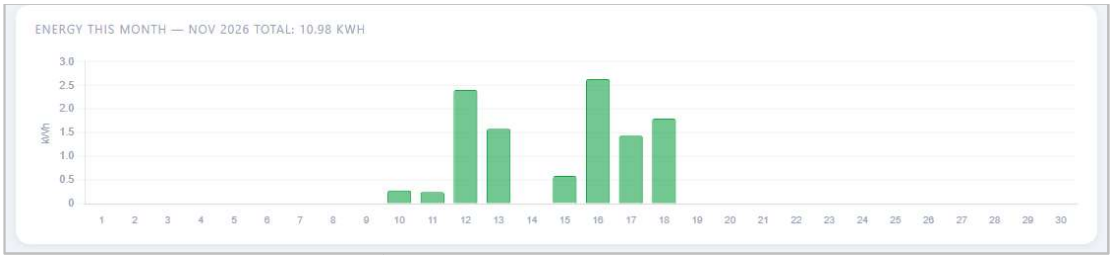

Web app: energy harvested on each day of the month (kWh)

Click **Download Excel** to save the data as an Excel file (Systellar_<Device ID>_<date>.xlsx). The first sheet gives today's solar power and cumulative energy for every

5-minute interval; the second sheet, once some days have been archived, gives the daily history of harvested energy, peak power and the highest and lowest battery voltage of each day.

As the owner, you can add other people as viewers by their email address (for example family members or your installer) and remove them again. A Systellar support viewer is added automatically when you claim the device, so that Systellar can help you with any device issue; you may remove it from your dashboard at any time.

Do not remove the claim sticker from the Comm Stick, and note down its Device ID and Passcode in a safe place; they are needed to claim the device. The Device ID is also shown on the System Information screen of the Settings Menu.

Date and time

The charge controller has no battery-backed clock. It takes the date and time automatically from the internet through the Comm Stick, so the clock never needs to be set. After a power cut the time is restored as soon as the Comm Stick is back online; the energy history for that period may be incomplete.

Firmware updates over the internet

Systellar may release improved firmware for the charge controller and for the Comm Stick. Updates are downloaded and installed automatically over WiFi; no action is needed from you.

- During a Comm Stick update, row 8 shows 'Updating Comm stick' and then 'Comm stick restarting', and a blinking down-arrow replaces the Bluetooth icon. Charging stops and the app cannot connect for a few minutes, until the update is complete.
- During a charge controller update, charging stops for a short time while the new firmware is installed, and the controller then restarts by itself. Do not disconnect the battery while an update is in progress.

Optional Accessories

1. Battery Temperature sensor



External Battery Temperature Sensor

The battery temperature sensor is supplied as an accessory. Paste the temperature sensor on the battery side using double-sided tape. Insert the 4-pin RJ11 connector at the end of the temperature sensor cable in the Battery temperature sensor slot provided on the left side of the charge controller.

2. RS-485 Adapter

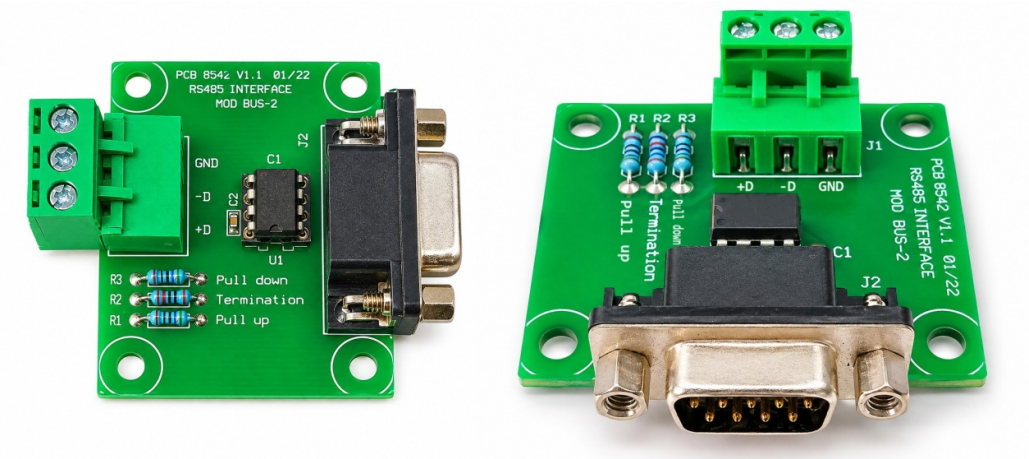

RS-485 Adapter card: +D / -D / GND MODBUS terminal block (J1) and 9-pin D-type connector to the charge controller (J2)

The RS-485 adapter card is available as an optional accessory for transferring data from the charge controller over MODBUS (RTU protocol). It fits on the left side of the charge controller, on the 9-pin D-type connector.

Troubleshooting

S No.	Symptoms	Remedy
1	Display is off	• Check the battery connection and polarity. • Battery voltage below 10V may not power up the unit.
2	Not producing expected power	• Check PV connections. • Check PV conditions like dirty panels / clouds / partial shading / panel very hot. • Check the short circuit current (Isc) of the panels with a DC clamp meter, or with a DC ammeter rated above the panel Isc and Voc. **WARNING:** First disconnect the solar panel from the charge controller; never connect an ammeter across the charge controller PV terminals. Connect and remove the meter only with the panels covered or through a DC isolator, because breaking a DC current draws an arc. PV voltage up to 175V can give a dangerous electric shock. • Check Max charging current setting. • Check that the battery is not in the Absorption or trickle charge stage.
3	Not equalizing	• Not sufficient solar power to take the battery to equalize voltage for an equalizing time. • High load on battery so that sufficient charging current is not available to the battery.
4	Always in Night mode	• Check PV connections. • Check the PV voltage. It should be more than 18V for 12V battery, 33V for 24V battery, 45V for 36V battery and 57V for 48V battery bank. • Check the solar panel polarity. A reversed panel gives no LED or fault indication; the controller just stays in Night.

5	LCD scrambled	• Press NEXT key.
6	WiFi and Bluetooth icons each followed by a small x; row 8 shows 'No BLE/WiFi module'	• Power off the charge controller (disconnect the solar panel, then the battery), check that the Comm Stick is plugged in fully, then reconnect the battery followed by the solar panel. • Select 'Re-check BLE/WiFi' in the Settings Menu. • If the message remains, call the helpline.
7	Comm Stick not found in the app's scan	• Check that the Bluetooth icon is shown on the LCD. • Turn on Bluetooth on the phone and allow the app's Nearby devices / Location permission. • Move closer to the charge controller and tap Start Scan again. • If the Comm Stick LED keeps blinking red slowly, the Comm Stick has not been started by the charge controller; select 'Re-check BLE/WiFi' in the Settings Menu.
8	WiFi icon keeps blinking	• Wrong WiFi password, or the router is out of range or switched off. • The WiFi network may be 5 GHz only; the Comm Stick needs a 2.4 GHz network. • Set up WiFi again from the app. To clear the stored network first, hold the Forget WiFi button on the Comm Stick until its LED turns steady red (about 2 seconds).
9	WiFi icon shown with a slash	• The Comm Stick is connected to the router, but the router has no internet. Check the internet connection of the router.
10	Web dashboard not updating	• Check that the WiFi icon on the LCD is steady and without a slash. • At night the readings are uploaded only every 5 minutes. • Reload the dashboard page.
11	Any other error	• Call the dealer from whom it was purchased / Systellar Innovations helpline +91 121 434 2043. Keep the Model name and product serial number handy.

Ordering Information

Product model code:

CC-MPPT-Gen6 - 200V - 12/24/36/48V - 75A - L1 – PS1 – WiFi

(Basic model name)

- Voltage class → 200V (maximum solar panel Voc: 175V)
- Maximum charging current → 75A
- DC Load output: (Available) → L1
- Power saver relay (Available) → PS1
- WiFi / Bluetooth (BLE) Comm Stick (Supplied) → WiFi

Standard models are:

- CC-MPPT-Gen6 - 200V – 12/24/36/48V - 75A - L1 – PS1 – WiFi
- CC-MPPT-Gen6 - 200V – 12/24/36/48V - 50A - L1 – PS1 – WiFi

For MODBUS (RS-485) communication, order the optional RS-485 adapter card.

Maximum Allowed Solar Panel Capacity

Nominal Battery bank voltage	Max. Solar panel capacity
12V-50Amp	800 Wp
12V-75Amp	1200 Wp
24V-50Amp	1600 Wp
24V-75Amp	2400 Wp
36V-50Amp	2400 Wp
36V-75Amp	3600 Wp
48V-50Amp	3200 Wp
48V-75Amp	4800 Wp

Systellar MPPT Solar Charge Controller – CC-MPPT-Gen6

Detailed Technical specifications

S No	Item	Description
1.	Battery voltage range	200V model: 12/24/36/48V (nominal) Field programmable. (For Lead-acid batteries, number of 12V batteries can be specified. For other chemistries number of cells in the battery bank may be specified.) The maximum end-of-charge voltage for the battery bank can be up to 60V, and the maximum equalize charge voltage up to 62V.
2.	Maximum V_oc (open circuit solar panel voltage)	175V maximum at all battery bank nominal voltages (12/24/36/48V), including the rise in panel Voc in cold weather. (200V is the absolute limit of the power devices.)
3.	Cell chemistries supported	• Lead-Acid (SMF / FLA / Tubular / Gel) • Li-ion • LiFePO4 • Ni-Cd
4.	Maximum allowed solar panel capacity	800 Wp (12V-50Amp) to 4800 Wp (48V-75Amp) — see 'Maximum Allowed Solar Panel Capacity'.
5.	Load output	DC output is equal to the battery voltage. Maximum current: 40A.
6.	Display	128x64 pixel back-lit graphic LCD, 8 rows of about 22 characters each.
7.	Keyboard	5 keys on the front panel: INCR, DECR, NEXT, ESC and SEL.
8.	LED indicators	Green: charging status. Blue: Power saver or DC load on/off status (selectable). Red: faults (battery discharged, overload, battery voltage too high, PV voltage too high). See 'LED Indication' for the blink codes.
9.	User-programmable charging parameters	Set from the keyboard or the Android app (details in 'Cell Settings' and 'Programmable Parameters'): • **Battery end of charge voltage** • **Battery absorption charge stage period** • **Battery trickle charge voltage** • **Battery re-bulk voltage** • **Battery Low cut enter voltage** — not below 10.0V for any battery bank; Low cut exit voltage = nominal battery bank voltage • **Battery Equalize charge voltage** — lead-acid only • **Equalizing charge interval** — lead-acid only • **Equalizing charge time** — 0 to 120 min, lead-acid only • **Temp Coefficient** — lead-acid only • **Power saver turn-on / turn-off thresholds** • **Maximum charging current** — 5 to 50 A / 5 to 75 A

		• **Load Ctrl code** — 0: always on; 1: dusk to dawn; 2–14: hours after dusk • **Led B indicator mode** — Power saver or DC load status
10.	5-stage charging for maximum battery care	1. Deep discharge (Li-ion only; not LiFePO4); 2. Bulk; 3. Absorption; 4. Trickle; 5. Equalizing (lead-acid only, manual or at a programmable interval).
11.	Temperature compensation of charging thresholds	With the optional battery temperature sensor. Lead-acid batteries only (temperature coefficient is 0 for all other types).
12.	Heat sink temperature sense	Built-in heat sink temperature sensor stops charging in case of overheating of the heat sink.
13.	Power saver relay	Built-in power saver relay. Common and N/C contacts are available for the connection of the input AC mains to the inverter. Relay capacity 250V AC 20A.
14.	Idle current from the battery	Max: 60 mA.
15.	Technology	Triple Interleaved Synchronous Buck Converters.
16.	Microcontroller	ARM-based 32-bit advanced microcontroller.
17.	Optional accessories	1. Battery temperature sensor with 3 m cable. 2. RS-485 adapter card (fits the 9-pin D-type connector on the left side) for transferring data over MODBUS (RTU protocol).
18.	Operating temperature range	0°C to 45°C ambient.
19.	Connectivity	Plug-in Comm Stick (GX16 connector) with WiFi (2.4 GHz, IEEE 802.11 b/g/n) and Bluetooth Low Energy (BLE). Comm Stick CS32-01: 70 mm × 110 mm × 32 mm (W × H × D), weight 150 g.
20.	App and remote monitoring	• Android app over Bluetooth: WiFi set-up, live readings, view / change settings (PIN protected). • Systellar web dashboard (https://systellar-cc-mppt.web.app) over WiFi: live readings, today's power curve, daily energy history, settings (read-only); the owner can add and remove viewers.
21.	Firmware updates	Charge controller and Comm Stick firmware can be updated over the internet.
22.	Date and time	Set automatically from the internet through the Comm Stick (no clock setting needed).

The above User Manual and Technical Specifications are for firmware version 3.00 onwards.

** For continuous product improvement, product specifications can change without notice.*

Company Contact details:

Systellar Innovations
Shankar Chowk, Delhi Road, Meerut – 250002
Ph: +91 121 434 2043 | Email: info@systellar.in
Website: www.systellar.in

Web app: https://systellar-cc-mppt.web.app

File: CC_MPPT_Gen6_WiFi_BLE_users_manual_w_Tech_specs_2026_11_24.docx
Issue: 1 24/11/2026